EM

Panel-mounting thermostats

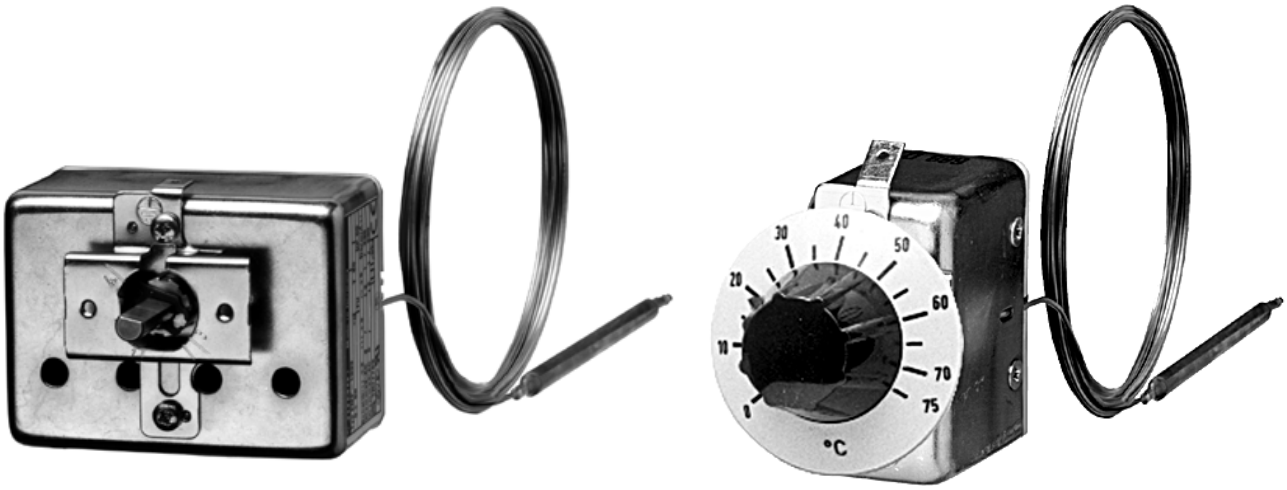

B 602021.0

Operating manual

JUMO

2013-03-18/00073772

☞ Please read these Operating Instructions before commissioning the instrument. Keep the manual in a place that is accessible to all users at all times. Please assist us to improve these operating instructions, where necessary. Your comments will be appreciated.

Phone+49 661 6003-0
Fax+49 661 6003-607

☞ All necessary settings and possible adjustments inside the instrument are described in these operating instructions. If any problems should still arise during start-up, you are asked not to carry out any unauthorized manipulations on the unit. You could endanger your rights under the instrument warranty! Please contact the nearest subsidiary or the head office in such a case.

Contents

1 Introduction

1.1 Typographical conventions

1.1.1 Warning signs

⚠

Danger

This symbol is used when there may be **danger to personnel** if the instructions are ignored or not followed correctly!

☝

Caution

This symbol is used when there may be **damage to equipment** if the instructions are ignored or not followed correctly!

1.1.2 Note signs

☞

Note

This symbol is used when your **special attention** is drawn to a remark.

⇨

Reference

This symbol refers to **further information** in other chapters or sections.

abc[1]

Footnote

Footnotes are remarks that **refer to specific points** in the text. Footnotes consist of two parts:

A marker in the text, and the footnote text.

The markers in the text are arranged as continuous superscript numbers.

The footnote text (in smaller typeface) is placed at the bottom of the page and starts with a superscript number.

*

Action instruction

This symbol indicates that an **action to be performed** is described.

The individual steps are marked by this asterisk, e.g.

* Open housing

1.2 Application

Thermostats control and monitor thermal processes.

Panel-mounting thermostats operate on the principle of liquid or gas expansion. A microswitch serves as the electrical switching device.

The devices of the EM model series can be supplied as temperature controllers TR, operating temperature limiters TW, operating temperature limiters TB, protection temperature limiters STW and protection temperature limiters STB.
In case of faults, the STB switches the plant that it is monitoring into an operationally safe state.

Versions to: DIN EN 14597

TR	Temperature controller
TW	Operating temperature limiter
TB	Operating temperature limiter
STW(STB)	Protection temperature limiter
STB	Protection temperature limiter

Type approval according to:

- DIN EN 14597
- Pressure Equipment European Directive 97/23/EC
  (only Type EM-20, EM-30, EM-40, EM-50)
- VDE 0631
- UL
- CSA (only Type EM-1, EM-2, EM-4, EM-50)

You will find the Declarations of Conformity at:

www.jumo.net ⇨ Products ⇨ Thermostats ⇨ Data Sheet 602021

or ask for them to be sent.

Cutting through or kinking the capillary of the panel-mounting thermostat, EM series, will lead to permanent instrument failure!!

1.3 Marking

Depending on the version: 0036

(see nameplate for details)

1.4 Safety notes

☞ Filling liquid may escape in the event of a measuring system fracture.
At present, any health risks can be excluded.

Physical and toxicological properties of the expansion fluid that may escape in the event of a system fracture.

Control range with end of scale °C	Dangerous reactions	Fire and explosion hazard		Water contamination	Toxicological data		
		Ignition temperature °C	Explosion limit % v/v		irritant	danger to health	toxic
< +200	no	+355	0.6 - 8	yes	yes	1	no
≥ +200 ≤ +350	no	+490	- -	yes	yes	1	no
> +350 ≤ +500	no	no	no	no	no	no	no

[1] At present, there is no restrictive statement from the health authorities concerning any danger to health over short periods and at low concentration, e.g. after a fracture of the measuring system.

2.1 Type nameplate

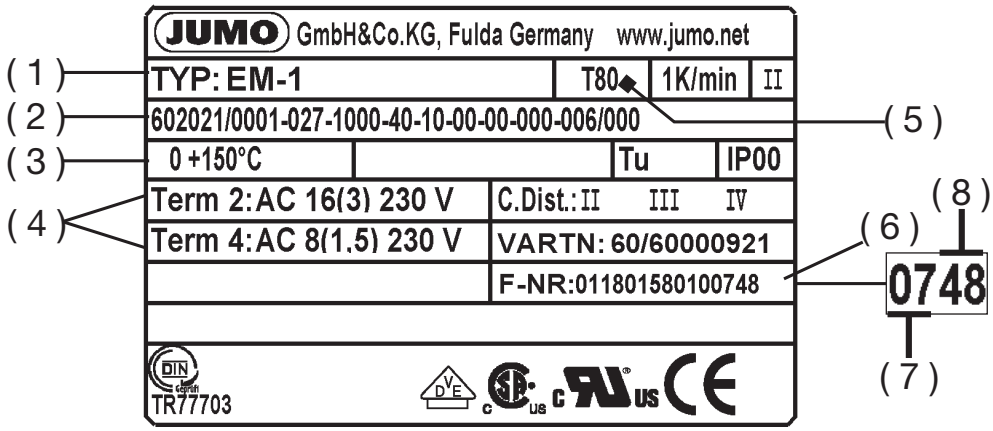

(1) Type

(2) Type code

(3) Regulating or limit value range / ambient temperature at which this thermostat was calibrated (Option)

(4) Switching capacity

(5) Permissible ambient temperature

(6) Serial number

(7) Date of manufacture

(8) Week of manufacture

2 Instrument identification

2.2 Type designation

Type designation

EM	- .. - .. / ..	Panel-mounting thermostat with one microswitch
EMF	- .... - .. / ..	Panel-mounting thermostat with 2, 3 or 4 microswitches
		Standard connection "10" (plain cylindrical probe)
	- 1...	Temperature controller TR with changeover contact
	- 2...	Operating temperature limiter TW with changeover contact
	- 3...	Operating temperature limiter TW with changeover contact; Changeover contact setting fixed at the factory
	- 4...	Operating temperature limiter TB with NC contact and restart inhibit; Changeover contact setting fixed at the factory
	- 5...	Operating temperature limiter TB with NC contact and restart inhibit
	- 20	Protection temperature limiter STW (STB) with changeover contact
	- 30	Protection temperature limiter STW (STB) with changeover contact; Changeover contact setting fixed at the factory
	- 40	Protection temperature limiter STB with NC contact and restart inhibit; Changeover contact setting fixed at the factory
	- 50	Protection temperature limiter STB with NC contact and restart inhibit
	- .... - .. / 707	Temperature compensation at switch head
	- .... - .. / 702	Snap-action switch contacts gold-plated
	- .... - .. / 574	Microswitch with n.c. (break) contact, lock-out and additional signal contact (TB and STB only)

3.1 Dimensions

EM-1

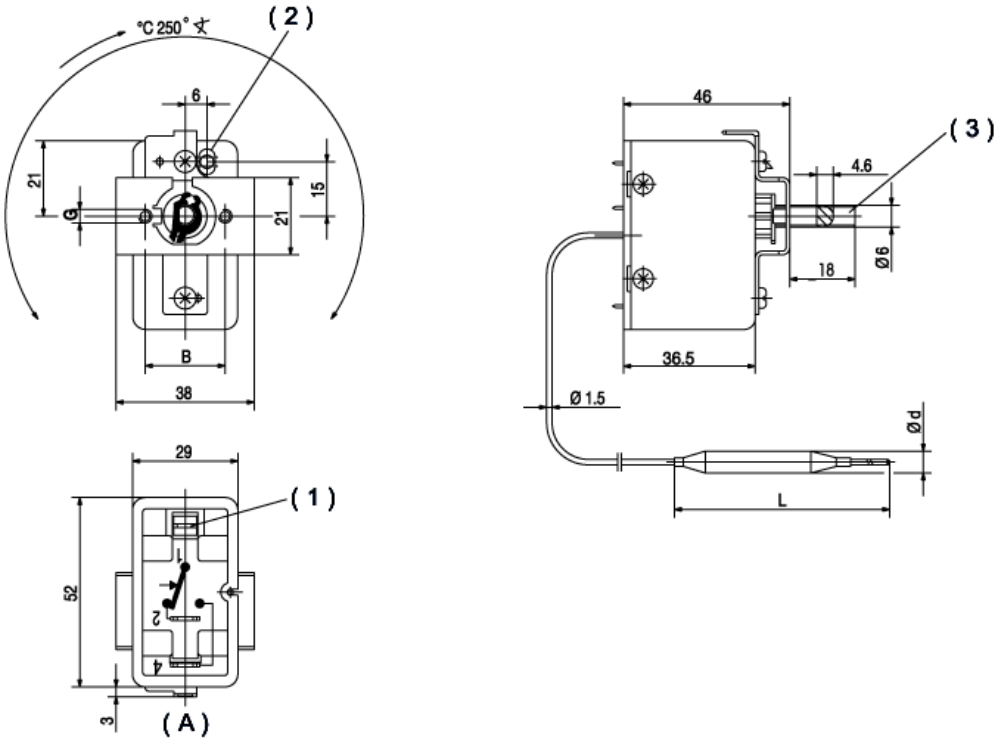

EMF-13

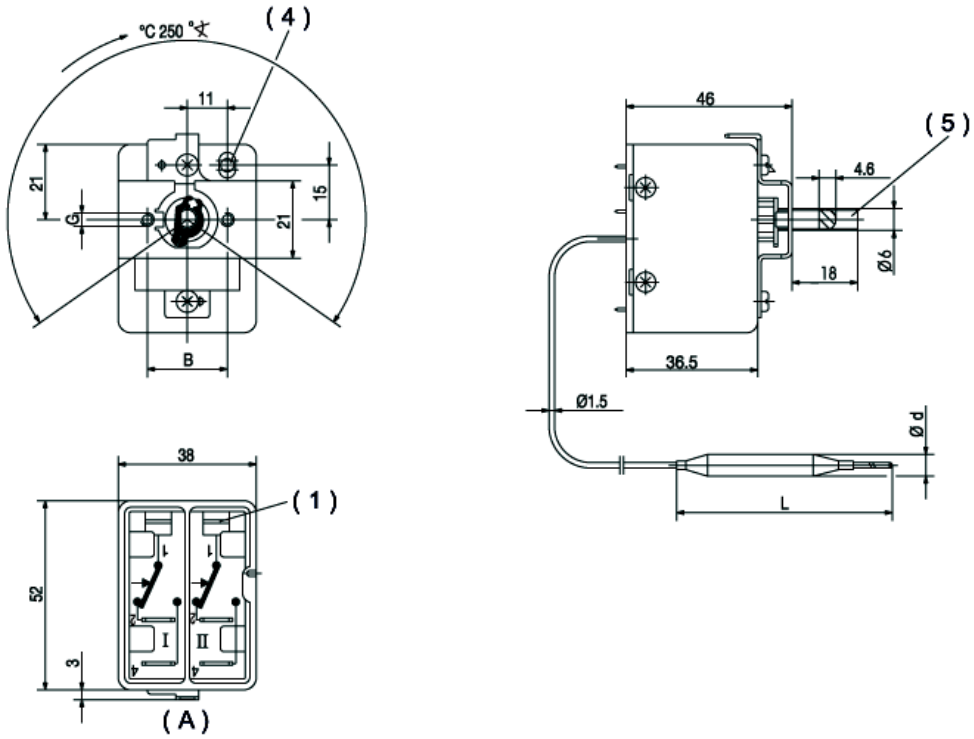

(1) Faston connector A 6.3 x 0.8 to DIN 46 244
(2) Reset button (with codes 4 and 5 only)
(3) omitted with codes 2, 3, 4 and 5
(4) Reset button (with codes 4, 5, 40 and 50 only)
(5) omitted with codes 2, 3, 4, 5, 20, 30, 40, 50
(A) Rear view

3 Mounting

EMF-133

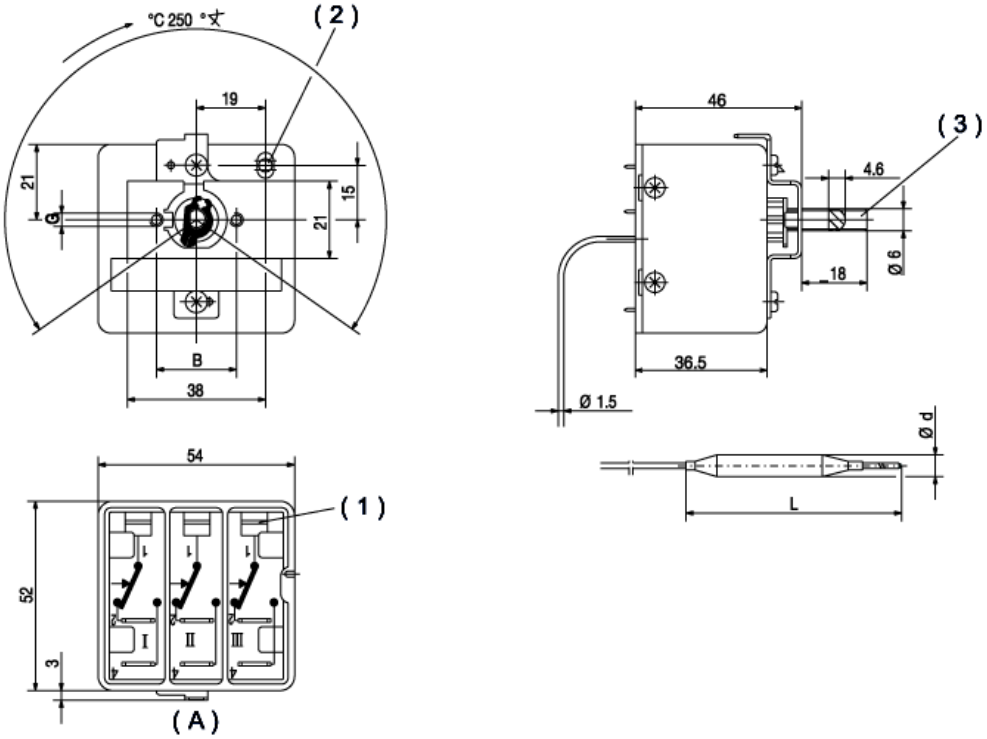

EMF-1333

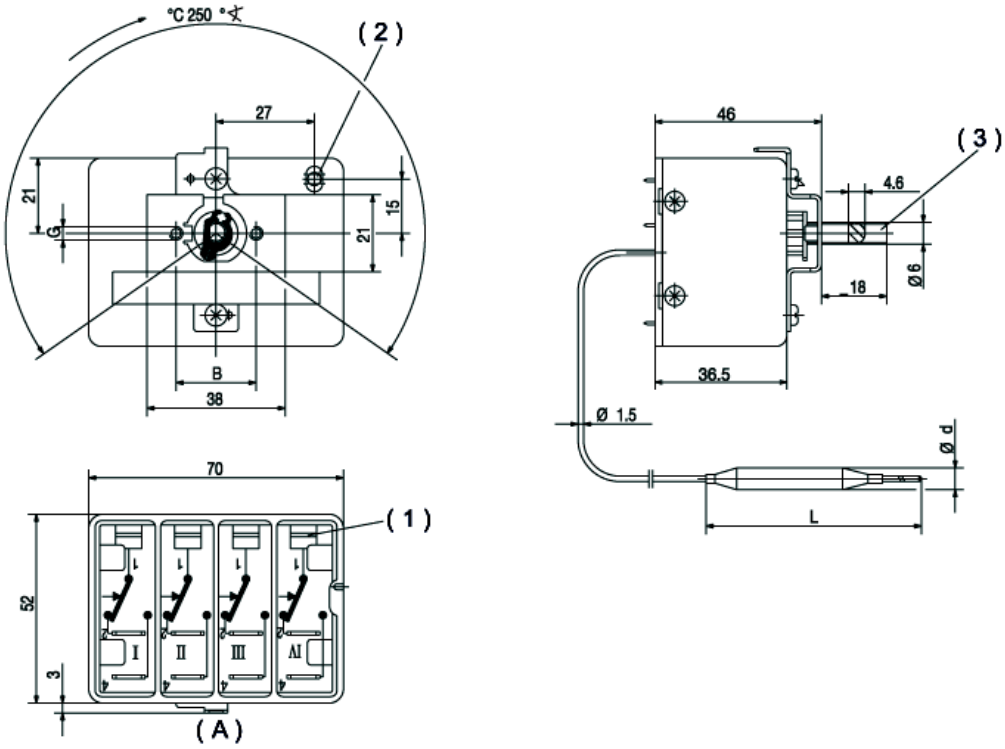

(1) Faston connector A 6.3 x 0.8 to DIN 46 244
(2) Reset button (with codes 4 and 5 only)
(3) omitted with codes 2, 3, 4 and 5
(4) Reset button (with codes 4, 5, 40 and 50 only)

(A) Rear view

3.2 Fixing the panel-mounting thermostat

Operating position

unrestricted

3.2.1 Mounting the switch head

Type EM.-1...

by two M3 screws
(M4 with extra code 704)
on chassis:

(1) Screw

(2) Panel

Extra code	Dim. (mm)	
	G	B
Series	3.5	22
704	4.5	28
705	3.5	33

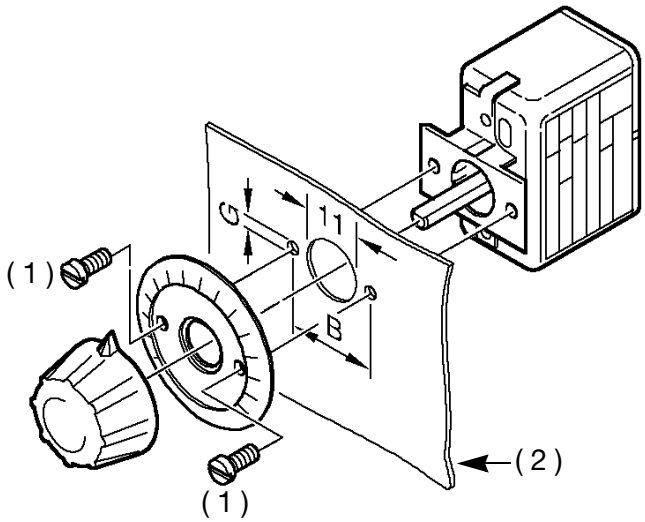

Type EM.-2... , -3... , -4... , -5... , -20, -30, -40 or -50

by two M3 screws
(M4 with extra code 704)
on chassis:

(1) Screw

(2) Panel

Type	Dim. (mm)	
	X	Y
EM-2, -3, -20, -30	- -	- -
EM-4, -5,	15	6
EM-40, -50		11
EMF-44, -54		11
EMF-444, -544		19
EMF-5444		27

Dimensions B and G, see above

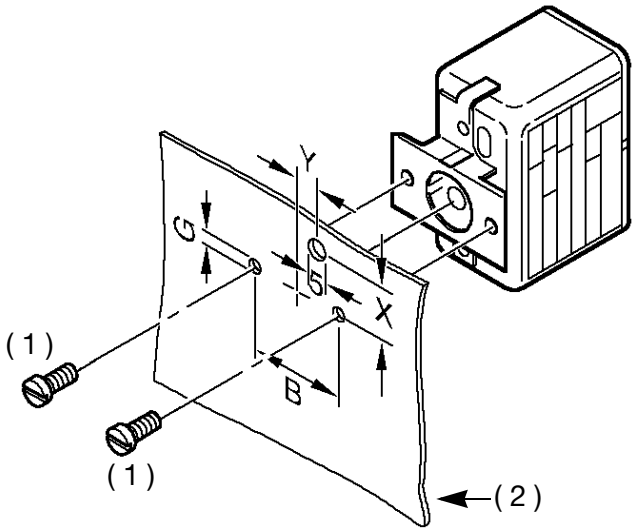

3 Mounting

Type EM.-4, -5, -40 or -50 central fixing
(extra code 710)

(1) Panel

(2) Fixing nut M10 x 1 (13 a/f)

(3) Cap nut M10 x 1 (10 a/f)

(4) Reset button

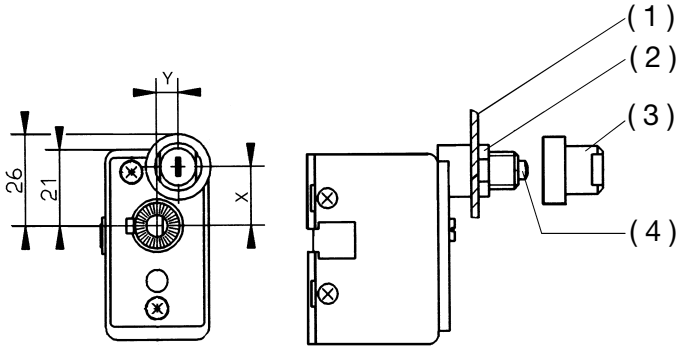

Type	Dim. (mm)	
	X	Y
EM-4, -5	16	6
EM-40, -50,		11

3.3 Capillary / temperature probe / pocket

3.3.1 General

Cutting through or kinking the capillary of the panel-mounting thermostat will lead to permanent instrument failure!

Minimum permissible bending radius of the capillary is 5 mm.

The temperature probe must be mounted in a JUMO pocket, otherwise the approval of the panel-mounting thermostat becomes invalid.

The temperature probe must be completely immersed in the medium to be measured. The temperature probe or protection tube must **not** come into contact with the walls of the container or pipe.

To ensure their overall accuracy, the thermostats must only be used together with the pockets supplied by the factory (diameter D = 8 or D = 10 mm).

Pockets with diameter D = 10 mm may only be fitted with probes with diameter d = 8 mm.

Fitting several probes into a common pocket is permissible with 2 or 3 cylindrical probes with diameter D = 6 mm and pockets 15 x 0.75 mm.
When fitting 2 probes in a common pocket, the factory-supplied spring clip must be fitted in the pocket.

For operation in air, probe mounting type “10” (without pocket) must be chosen.

In the case of pockets 22, 41, 42 and 45, in materials St35.8 I, the permissible operating life at operating temperatures above +420°C is limited to 200,000 hours. The requirements of TRD 508 must be observed for operation in this range.

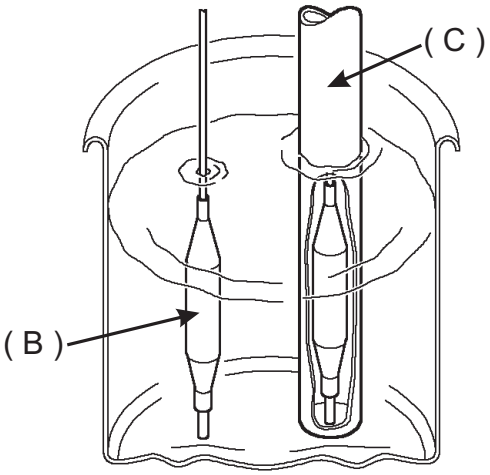

(B) Immersion tube
(C) Temperature probe

3.3.2 Approved probes or pockets

refer to data sheet 606710 !

3.4 Permissible loading on the pocket

3.4.1 Pockets 20, 22/23, 40 and 41/42

The values given below refer to the maximum loading on the probe mounting concerned. The maximum pressure which can be sealed depends on the mounting conditions and may possibly be lower.

3.4.1.1 Steel pockets 22, 23, 32, 41, 42 and 45

Materials

Tube:	St35.8 I
Screw-in nipple up to 300°C:	Steel 1.0038
Weld-in nipple:	Steel 1.5415

Loading

Temperature	Tube diameter D		
	8 x 0.75 mm or conical	10 x 0.75 mm	15 x 0.75 mm
	Max. permissible pressure		
100°C	89 bar	72 bar	48 bar
150°C	83 bar	67 bar	45 bar
200°C	78 bar	63 bar	42 bar
300°C	59 bar	47 bar	32 bar
350°C	50 bar	40 bar	27 bar

Permissible incident flow velocity

Material:	St35.8 I	
Temperature:	+200°C	
Thermal medium:	air (1) water, oil (2)	
Tube diameter D:	————————	8 mm
	- - - - - - - -	10 mm
	. . . . .	15 mm

Permissible incident flow velocity (m/sec) at the maximum permissible pressure loading and different immersion tube lengths “S”.

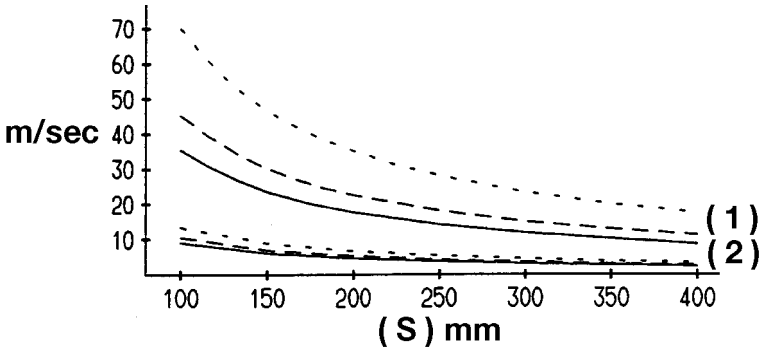

(1) Air
(2) Water, oil

Permissible incident flow velocity (m/sec) at the maximum permissible pressure loading and different immersion tube temperatures “t”.

Material:	St35.8 I	
Immersion tube length “s”:	200 mm	
Thermal medium:	air water, oil	
Tube diameter D:	————————	8 mm
	- - - - - - - -	10 mm
	. . . . .	15 mm

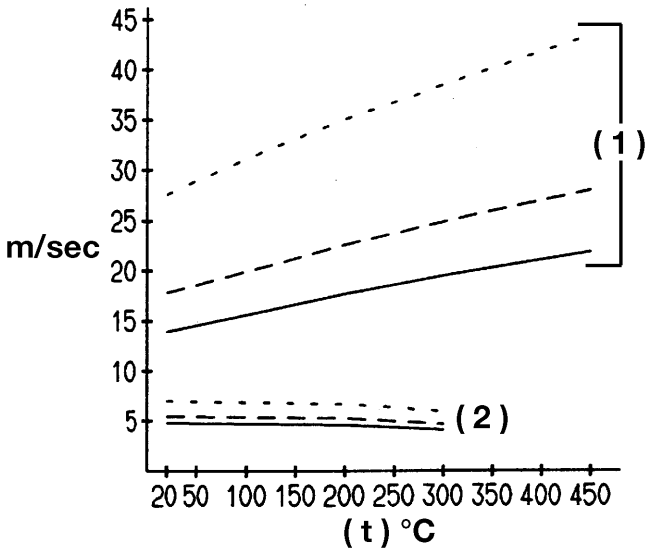

(1) Air
(2) Water, oil

3.4.1.2 Stainless steel pockets 20, 22, 40 and 41/42

Loading

Material of tube and nipple: stainless steel (1.4571)			
Temperature	Tube diameter D		
	8 x 0.75 mm or conical	10 x 0.75 mm	15 x 0.75 mm
	Max. permissible pressure		
100°C	92 bar	74 bar	50 bar
150°C	88 bar	71 bar	48 bar
200°C	83 bar	67 bar	45 bar
300°C	72 bar	58 bar	39 bar
400°C	67 bar	54 bar	36 bar

3.4.1.3 Brass pockets 20 and 40

Loading

Material of tube and nipple: CuZn			
Temperature	Tube diameter D		
	8 x 0.75 mm	10 x 0.75 mm	15 x 0.75 mm
	Max. permissible pressure		
100°C	50 bar	40 bar	27 bar
150°C	48 bar	39 bar	26 bar

3.4.1.4 Probe mountings 50, 52 and 54

Nipple material	CuZn	steel	stainless steel (1.4571)
Temperature °C	200	300	400

Probe material	Ø mm	Thermostat action	
		TR, TW, TB	STB, STW (STB)
Cu-DHP	4	6 bar	2 bar
	5	5 bar	
	6	4 bar	
	7	3 bar	
	8	3 bar	
	9	3 bar	
	10	3 bar	
St35 / 1.4571	4 - 10	10 bar	2 bar

Forms 10, 15, 21, 60, 65 may only be used in unpressurized media.

The temperature probe (2) must be immersed in the medium for its entire length, otherwise there will be appreciable deviations from the switching point.

In the case of probe mountings 20, 22/23 and 21, the temperature probe is secured in the pocket by a clamping clip (1).

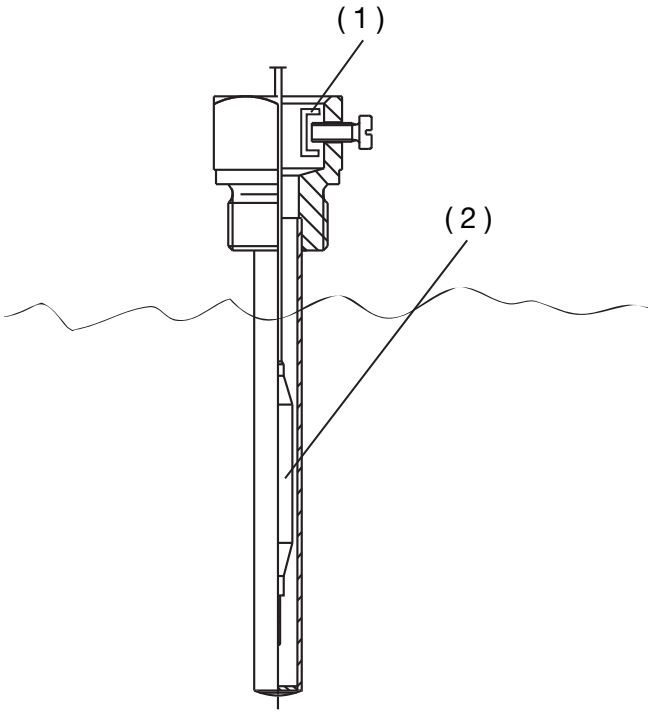

4 Installation

4.1 Regulations and notes

- The electrical connection must only be carried out by qualified personnel.
- The choice of cable, the installation and the electrical connection must conform to the requirements of VDE 0100 “Regulations on the Installation of Power Circuits with Nominal Voltages below 1000 V” or the appropriate local regulations.
- If contact with live parts is possible while working on the instrument, it must be completely disconnected from the electrical supply.
- Earth the instrument at the PE terminal to the protective earth conductor. This cable must have at least the same cross-section as used for the supply cables. Earthing cables must be wired in a star configuration to a common earth point that is connected to the protective earth conductor of the electrical supply. Do not loop earthing cables, i.e. do not run them from one instrument to another.
- Apart from faulty installation, incorrect settings on the thermostat may also affect the proper functioning of the subsequent process or lead to damage. Setting up must therefore be restricted to qualified personnel. Please observe the relevant safety regulations for such matters.

4.2 Electrical connection

- Terminals and connections are suitable for internal conductors
- The connection is suitable for fixed wiring.
- Cable entry without strain relief

- The thermostat conforms to Protection Class I.

Capillary tube has no protective conductor function!

With respect to the probe and capillary, the user himself is responsible for taking the necessary protective measures against electric shock.

Plug connection
(standard)

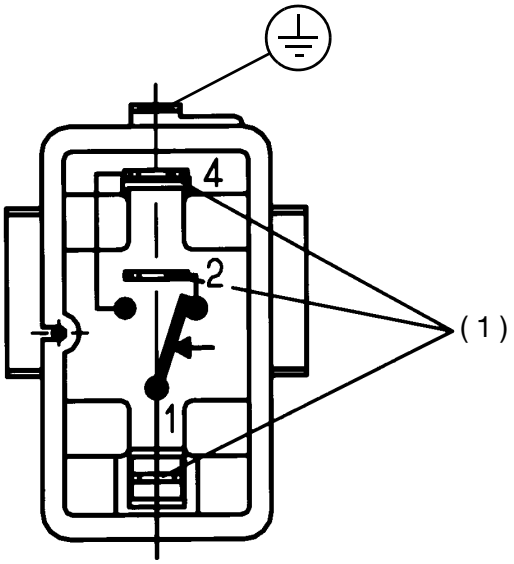

(1) = faston connector A 6.3 x 0.8 to DIN 46 244

Screw connection
(extra code 699)

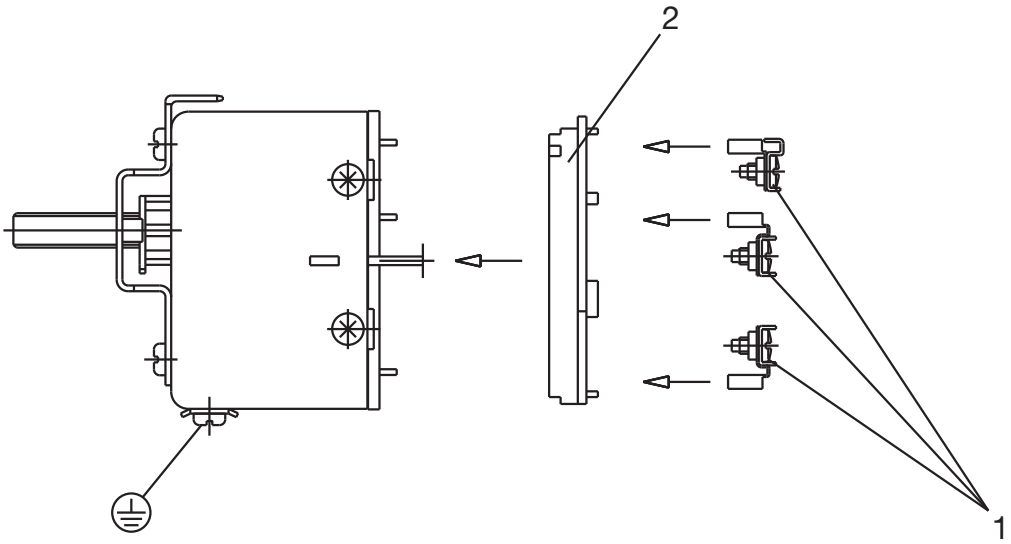

(1) Receptacle 6.3 with connection screw, suitable for conductor cross-sections up to 2.5 mm^2; attachment type X, no special tools

(2) Terminal strip

4.3 Connection diagrams

EM-1 EM-2 EM-3	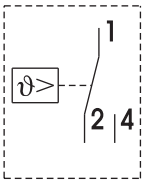	EM-4 EM-5	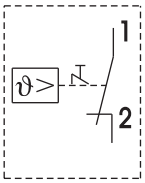
EMF-13 EMF-23 EMF-33 Setpoint: **I** Follow-on contact: **II**	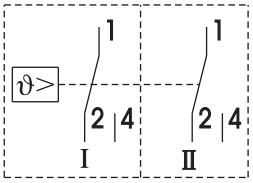	EM-4/574 EM-5/574	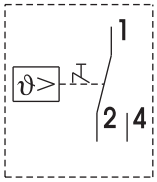
EMF-133 EMF-233 EMF-333 Setpoint: **I** Follow-on contact: **II, III**	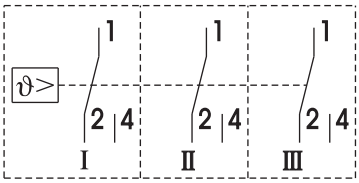	EM-40 EM-50 n.c. (break) contact on measuring system failure and T < -10 °C: **I** limit: **II**	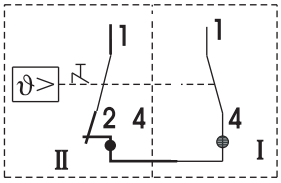
EMF-1333 EMF-2333 EMF-3333 Setpoint: **I** Follow-on contact: **II, III, IV**	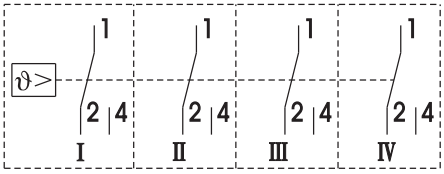	EM-40/574 EM-50/574	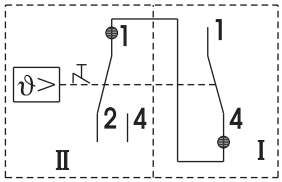
		EM-20 EM-30 n.c. (break) contact on measuring system failure and T < -10 °C: **I** limit: **II**	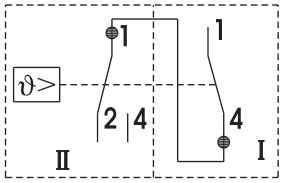

Example: EMF-1334	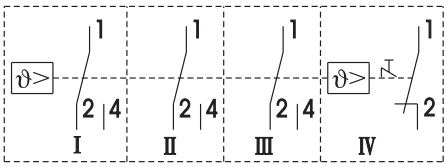	For other variants, the connection diagrams are combined appropriately.

5.1 Unlocking the operating temperature limiter (TB) or protection temperature limiter (STB)

EM-4
EMF-4...
EM-5
EMF-5...
EM-40
EM-50
with fixing bracket 704, 705

After the temperature has dropped by about 10% of span below the set limit (critical temperature), the microswitch can be reset.

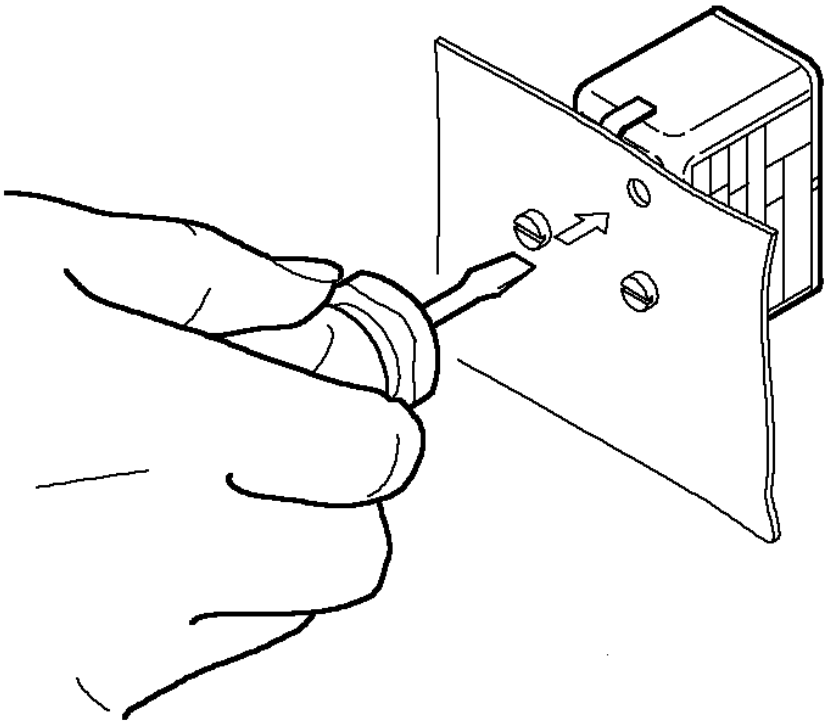

✱ Push the reset button using a small screwdriver

EM-4
EMF-4...
EM-5
EMF-5...
EM-40
EM-50
with central fixing 710

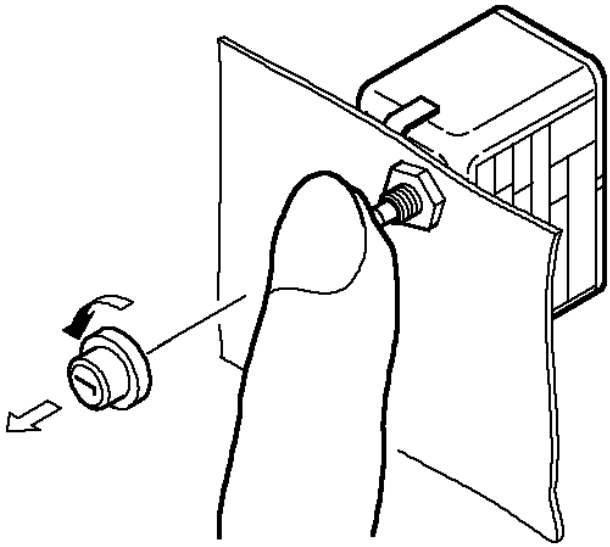

✱ Unscrew cap

✱ Press reset button

✱ Screw cap back into position

5.2 Setpoint adjustment

EM-1
EMF-1...

(1) Setpoint marker
(2) External scale
(3) Setpoint knob
(4) Scale graduation

✱ Rotate the setpoint knob by hand over the external scale

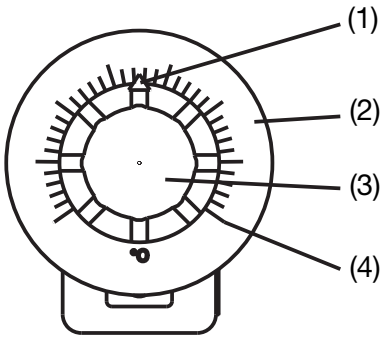

EM-2
EMF-2...
EM-5
EMF-5...
EM-20
EM-50

(1) Setpoint spindle
(2) Scale graduation
(3) Setpoint marker

✱ Rotate the setpoint spindle over the internal scale using a screwdriver

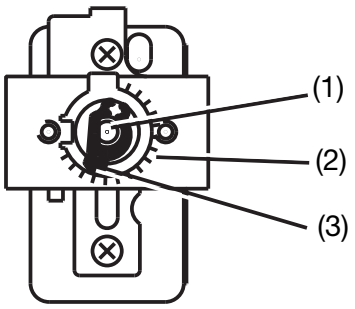

EM-3
EMF-3...
EM-4
EMF-4...
EM-30
EM-40

☞ The limit setting is fixed at the factory and sealed.
It must subsequently **not** be adjusted.

5.3 Self-monitoring on the STB and STW (STB)

☞ If the measuring system fails, i.e. if the expansion liquid has leaked, then the pressure under the diaphragm drops and the circuit is permanently open. It is **no longer** possible to reset the system.

When the temperature at the probe falls below approx. -20 °C, the circuit is also opened, but will close again automatically when the temperature rises above -10 °C.

5.4 Use of the STW (STB) as STB

⚠ The lock-out facility to DIN EN 14597 must be ensured by the subsequent circuit. This circuit must comply with VDE 0116.

6.1 Technical data

Permissible ambient temperature

	Capillary		Switch head		for end of scale
	TR,TW	TB, STW(STB) STB	TR,TW	TB, STW(STB) STB	
max.	see nameplate				
min.	-40 °C	-20 °C	-20 °C	0 °C	< 200 °C
	-20 °C				≥ 200 °C ≤ 350 °C
	-40 °C				> 350 °C ≤ 500 °C

Permissible probe temperature

max.: end of scale / limit value +15%,
(for end of scale between +90 °C and 120 °C = min. 25 °C

min.: -50 °C (on STW(STB) and STB -35 °C)

Permissible storage temperature

max. +50 °C, min. -50 °C

Housing

galvanized steel sheet

Switching device

Type EM-....	Description
	1, 2, 3 or 4 single-pole snap-action switches
1, 2, 3, 20, 30	with changeover contact
4, 5, 40, 50	with n.c. (break) contact
4/574, 5/574, 40/574, 50/574	n.c. (break) contact with additional signal contact

Contact rating

Type EM-...	Switching differential %	Current		Voltage
		Terminal 2	Terminal 4	
1, 2, 3, 20, 30	2.5 / 5 /7 / 10	10 A	2 A	400 V AC +10%
4, 5, 40, 50	- -		- -	
1, 2, 3, 20, 30	2.5 / 5 / 6 / 7 / 10	16(3)	8(1.5) A	230 V AC +10% p.f. = 1 (0.6)
		0.25 A	0.25 A	230 V DC +10%
1, 2, 3, 20, 30	1 / 3	6(2)		230 V AC +10% p.f. = 1 (0.6)
		0.25 A		230 V DC +10%
4, 5, 40, 50	- -	16(3) A	- -	230 V AC +10% p.f. = 1 (0.6)
		0.25 A		230 V DC +10%
		0.1 A extra code “702”		24 V AC/DC
4/574, 5/574, 40/574, 50/574	- -	16(3) A	2(1) A	230 V AC +10% p.f. = 1 (0.6)
		0.25 A		230 V DC +10%
		0.1 A extra code “702”		24 V AC/DC

Contact reliability

To ensure maximum switching reliability, we recommend a minimum load of:

- AC / DC 24 V, 100 mA with silver contacts (standard)
- AC / DC 10 V, 5 mA in case of gold-plated contacts (extra code "702")

Rated surge voltage

2500 V (via the connecting contacts 400 V)

Overvoltage category II

Fusing required

see current rating

Switching point accuracy

(in % of scale span; referred to setpoint or limit value at T_A +22 °C, with rising temperature)

Type EM-...	Switching differential in %		Switching point accuracy in %	
	liquid-filled	gas-filled	in upper third of scale or at limit	at start of scale
1	1 / 2.5 5 7	- - 3 / 5 6 / 10	± 1.5 ± 3 ± 4	± 4 ± 5 ± 6
2, 3	1 / 2.5 5 7	- - 3 / 5 6 / 10	+ 0 / - 3 + 0 / - 6 + 0 / - 8	+ 0 / - 5 + 0 / - 8 + 0 / - 10
4, 4/574, 5, 5/574	- -	- -	+0 / -5	+0 / -7
20, 30	7	10	+0 / -8	+ 0 / - 10
40, 40/574, 50, 50/574	- -	- -		

Protection

EN 60 529 - IP00
Pollution degree 2

Operating medium

water, oil, air, superheated steam

Time constant $t_{0.632}$

in water	in oil	in air / superheated steam
≤ 45 sec	≤ 60 sec	≤ 120 sec

Mode of operation

as per EN 60 730-1, DIN EN 60 730-2-9 and DIN EN 14597

TR, TW	2 BL
TB	2 BFHLPV
STW(STB):	2 BKLNP
STB	2 BFHKLNPV

Explanation of codes:

2 mode of operation type 2
B automatic mode of operation with micro-disconnection
F can only be reset with tools
H free-release mechanism, contacts cannot be prevented from opening
K with probe break protection
L no auxiliary power required
P mode of operation type 2, verified through declared temperature cycling
V lockout

Nominal position

unrestricted

Weight

approx. 0.2 kg

Capillary and probe material

End of scale	Capillary	Probe
up to +200 °C	copper, Mat. Ref. Cu-DHP 1.5 mm diameter	copper, Mat. Ref. Cu-DHP brazed
up to +350 °C	copper, Mat. Ref. Cu-DHP 1.5 mm diameter	stainless steel, Mat. Ref. 1.4571 brazed
up to +500 °C	stainless steel, 1.5 mm diameter	stainless steel, Mat. Ref. 1.4571 welded
at extra cost		
up to +350 °C	stainless steel, 1.5 mm diameter	stainless steel, Mat. Ref. 1.4571 welded

Minimum bending radius of capillary

5 mm

Mean ambient temperature error

in % of scale span, referred to the limit value.

A deviation of the ambient temperature at the switch head and/or the capillary from the +22 °C calibration ambient temperature produces a shift in the switching point:

higher ambient temperature = lower switching point
lower ambient temperature = higher switching point

For temperatures with end of scale / limit value									
< +200 °C				≥ +200 °C ≤ +350 °C			≥ +400 °C ≤ +500 °C		
TR, TW, TB			STW STB	TR, TW, TB		STW, STB	TR, TW, TB STW, STB		
Switching differential in %									
1 / 2.5	5	7	7 / - -	1 / 2.5	5	7 / - -	3.5	6	10
Ambient temperature effect due to the switch head, % per °C									
0.15	0.26	0.34	0.43	0.12	0.21	0.35	0.12	0.17	0.24
Ambient temperature effect due to the capillary, % per °C per meter									
0.05		0.09		0.04		0.07	0.05		

Temperature compensation
(extra code 707)

Please see the diagram in Data Sheet 602021 for details.

JUMO GmbH & Co. KG
Moritz-Juchheim-Straße 1
36039 Fulda, Germany

Telefon: +49 661 6003 - 0
E-Mail: mail@jumo.net
Internet: www.jumo.net

EG Konformitätserklärung

EC Declaration of Conformity / Déclaration CE de conformité

Dokument-Nr. *Document No. / Document n°*	CE 203	
Hersteller *Manufacturer / Etabli par*	JUMO GmbH & Co. KG	
Anschrift *Address / Adresse*	Moritz-Juchheim-Straße 1, 36039 Fulda	
Produkt *Product / Produit*	Beschreibung	Einbauthermostat
	Typ/ Serie	EM-.. ; EMF-..
	Typenblatt-Nr.	60.2021; 60.2025; 60.2026

Wir erklären in alleiniger Verantwortung, dass das bezeichnete Produkt die Schutzanforderungen der Europäischen Richtlinien erfüllt.
We hereby declare in sole responsibility that the designated product fulfills the safety requirements of the European directives.
Nous déclarons sous notre seule responsabilité que le produit remplit les directives européennes.

Richtlinie *Directive / Directive*			Datum der Erstanbringung des CE-Zeichens auf dem Produkt *Date of first application of the CE mark to the product* *Date de 1ère application du sigle CE sur le produit*
2004/108/EG	[EMV-Richtlinie]		96
2006/95/EG	[Niederspannungs-Richtlinie]		95
97/23/EG	[Druckgeräterichtlinie, Modul B+D]	Kategorie IV	02
90/396/EG	[Gasgeräte-Richtlinie]		96

EG-Baumusterprüfbescheinigung
Type examination / Tests échantillon

IS-TAF-MUC 08 05 73377 020
CE-0085AR0124

Angewendete Normen
Standards applied / Normes appliquées

DIN EN 61326-1	Ausgabe: 10.2006
DIN EN 60730-1	Ausgabe: 06.2009
DIN EN 60730-2-9	Ausgabe: 07.2011
DIN EN 14597	Ausgabe: 12.2005
AD 2000 Merkblätter	

Anerkannte Qualitätssicherungssysteme der Produktion
Recognized quality assurance systems used in production / Organisme notifié agréé

nach Richtlinie 94/9/EG Modul D */ Directive 94/9/EC Module D / Directive européenne 94/9/CE module D*
TÜV NORD CERT GmbH, Am TÜV 1, D 30519 Hannover, Germany
Kennnummer 0044, Mitteilungsnummer TÜV 99 ATEX 1454 Q.
Identification No. 0044, Notification No. TÜV 99 ATEX 1454 Q / N° d'identification 0044, N° de signification TÜV 99 Atex 1454 Q

nach Richtlinie 97/23/EG Modul D */ Directive 97/23/EC Module D / Directive européenne 97/23/CE module D*
TÜV SÜD Industrie Service GmbH, Dudenstraße 28, 68167 Mannheim, Germany
Kennnummer 0036, Zertifikat-Nr. DGR-0036-QS-989-11
Identification No. 0036, Certificate No. DGR-0036-QS-989-11 / N° d'identification 0036 , N° de certificat DGR-0036-QS-989-11

Firma */ Company / Société*
JUMO GmbH & Co. KG, Fulda

Aussteller:
Issued by: / Etabli par:

Ort, Datum:
Place, date: / Lieu, date:

Fulda, 2012-10-10

Rechtsverbindliche Unterschrift
Legally binding signature
Signature juridiquement valable

Geschäftsbereichsleitung Verkauf und Produktion
Head of Division Sales and Production
Direction du département Ventes et Production
ppa. Günter Bott

JUMO GmbH & Co. KG
Street address:
Moritz-Juchheim-Straße 1
36039 Fulda, Germany
Delivery address:
Mackenrodtstraße 14
36039 Fulda, Germany
Postal address:
36035 Fulda, Germany
Phone: +49 661 6003-0
Fax: +49 661 6003-607
E-mail: mail@jumo.net
Internet: www.jumo.net

JUMO Instrument Co. Ltd.
JUMO House
Temple Bank, Riverway
Harlow - Essex CM20 2DY, UK
Phone: +44 1279 63 55 33
Fax: +44 1279 63 52 62
E-mail: sales@jumo.co.uk
Internet: www.jumo.co.uk

JUMO Process Control, Inc.
6733 Myers Road
East Syracuse, NY 13057, USA
Phone: 315-437-5866
1-800-554-5866
Fax: 315-437-5860
E-mail: info.us@jumo.net
Internet: www.jumousa.com